THIS DRAWING IS UNPUBLISHED. RELEASED FOR PUBLICATION -.- .
© COPYRIGHT - BY TYCO ELECTRONICS CORPORATION. ALL RIGHTS RESERVED.

LOC	DIST
GP	00

REVISIONS

P	LTR	DESCRIPTION	DATE	DWN	APVD
	O	RELEASED PER EC 0S13-0016-05	04-07-05	AF	JG

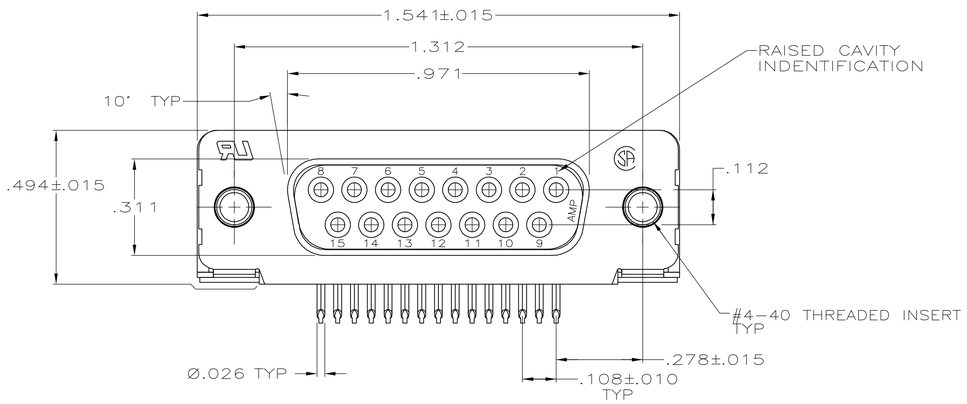

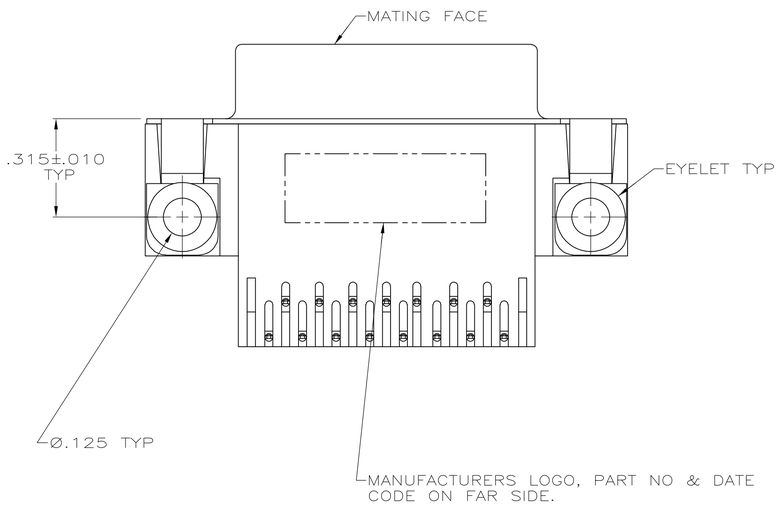

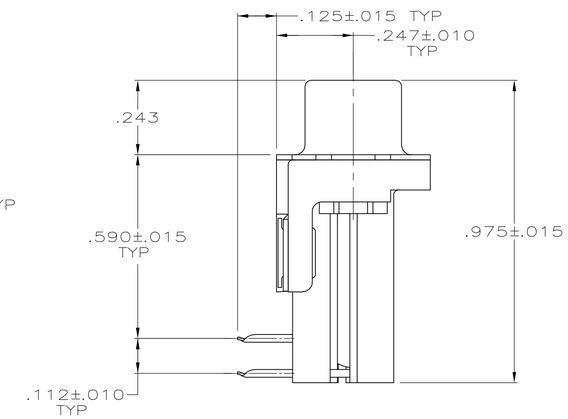

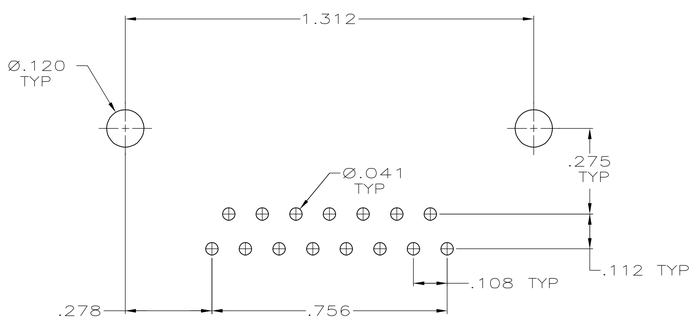

PC BOARD MOUNTING DIMENSIONS

1. MOLDED PARTS: FLAME RETARDANT 94V-0 RATED THERMOPLASTIC, BLACK.
SHELL: CARBON STEEL
CONTACTS: PHOSPHOR BRONZE
EYELETS: BRASS
INSERTS: ZINC

2. SHELL: .000100 MIN TIN OVER .000050 MIN COPPER.
CONTACTS: .000030 MIN GOLD FOR A DISTANCE OF .100 MIN FROM MATING END, .000100 MIN TIN ON SOLDER POST, ALL OVER .000050 MIN NICKEL.
EYELETS: .000100 MIN COPPER OVER COPPER FLASH.
INSERTS: CLEAR CHROMATE

5745984-4
PART NUMBER

COPYRIGHT 2005
TYCO ELECTRONICS CORP
ALL RIGHTS RESERVED

THIS DRAWING IS A CONTROLLED DOCUMENT.

DIMENSIONS: INCHES

TOLERANCES UNLESS OTHERWISE SPECIFIED:
0 PLC ± -
1 PLC ± -
2 PLC ± -
3 PLC ± .005
4 PLC ± -
ANGLES ± 2°

MATERIAL 1
FINISH 2

DWN 04-07-05 A. FERNANDEZ-DOCKS
CHK 04-07-05 S. BOLASH
APVD 04-07-05 M. WALMSLEY
PRODUCT SPEC 108-40025
APPLICATION SPEC 114-40010
WEIGHT -

Tyco Electronics Corporation
Harrisburg, PA 17105-3608

NAME
RCPT ASSY, SIZE 2, RTANG, W/FRONT METAL SHELL, .026 DIA POSTS, AMLPIMITE HD-20 (.590 FOOTPRINT) SHORT LEG

SIZE	CAGE CODE	DRAWING NO	RESTRICTED TO
A1	00779	C-5745984	-

CUSTOMER DRAWING | SCALE 4:1 | SHEET 1 OF 1 | REV O